Telemecanique
Square D

LC1-V160 / V320 / V610

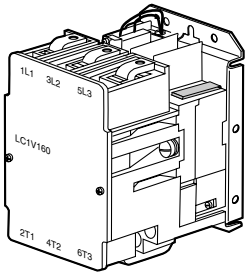

LC1-V160

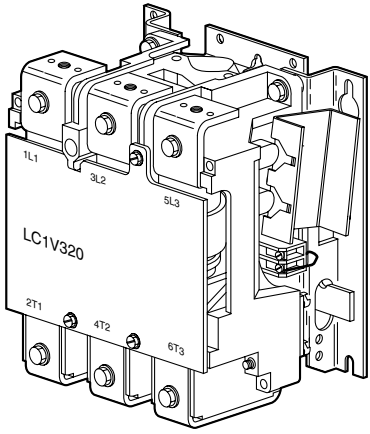

LC1-V320

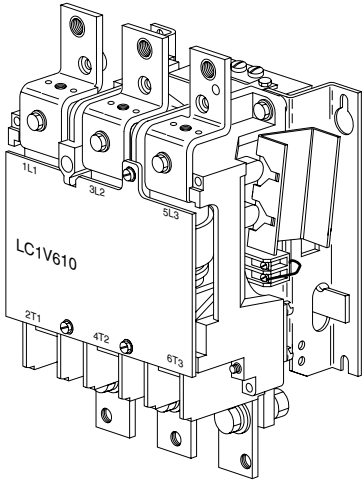

LC1-V610

W9 1511382 01 11 A01

Schneider Electric

ATTR 10/2000

LC1-V160

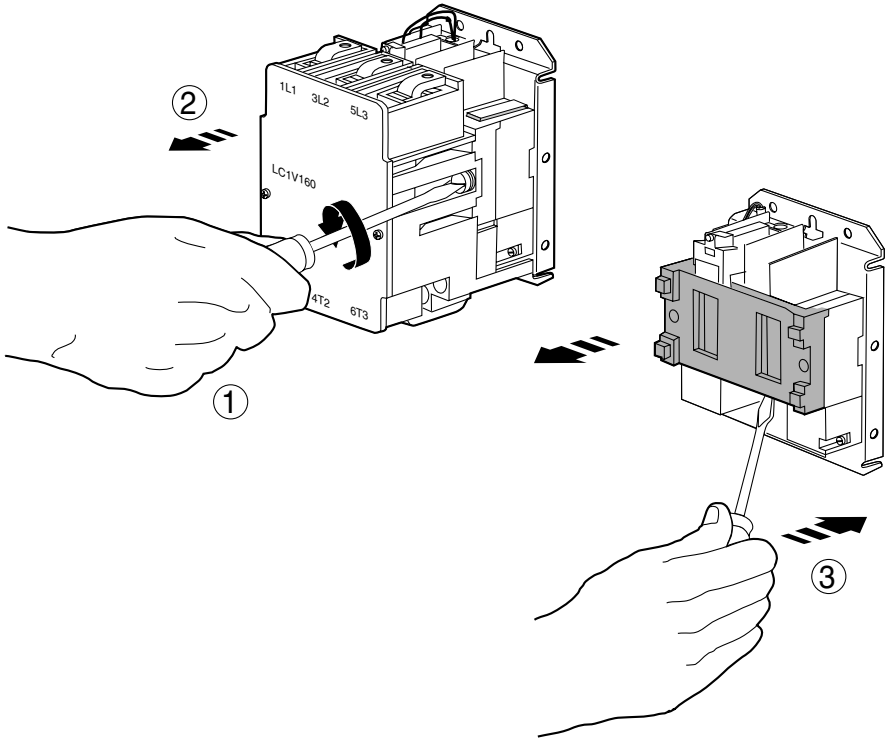

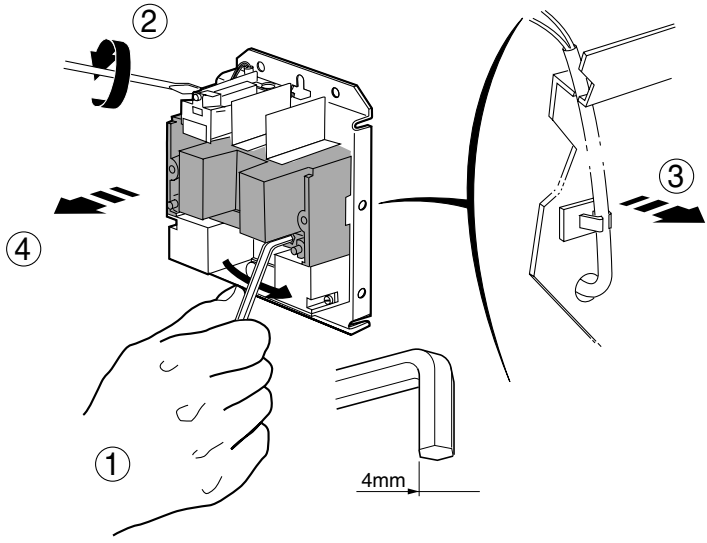

LC1-V160

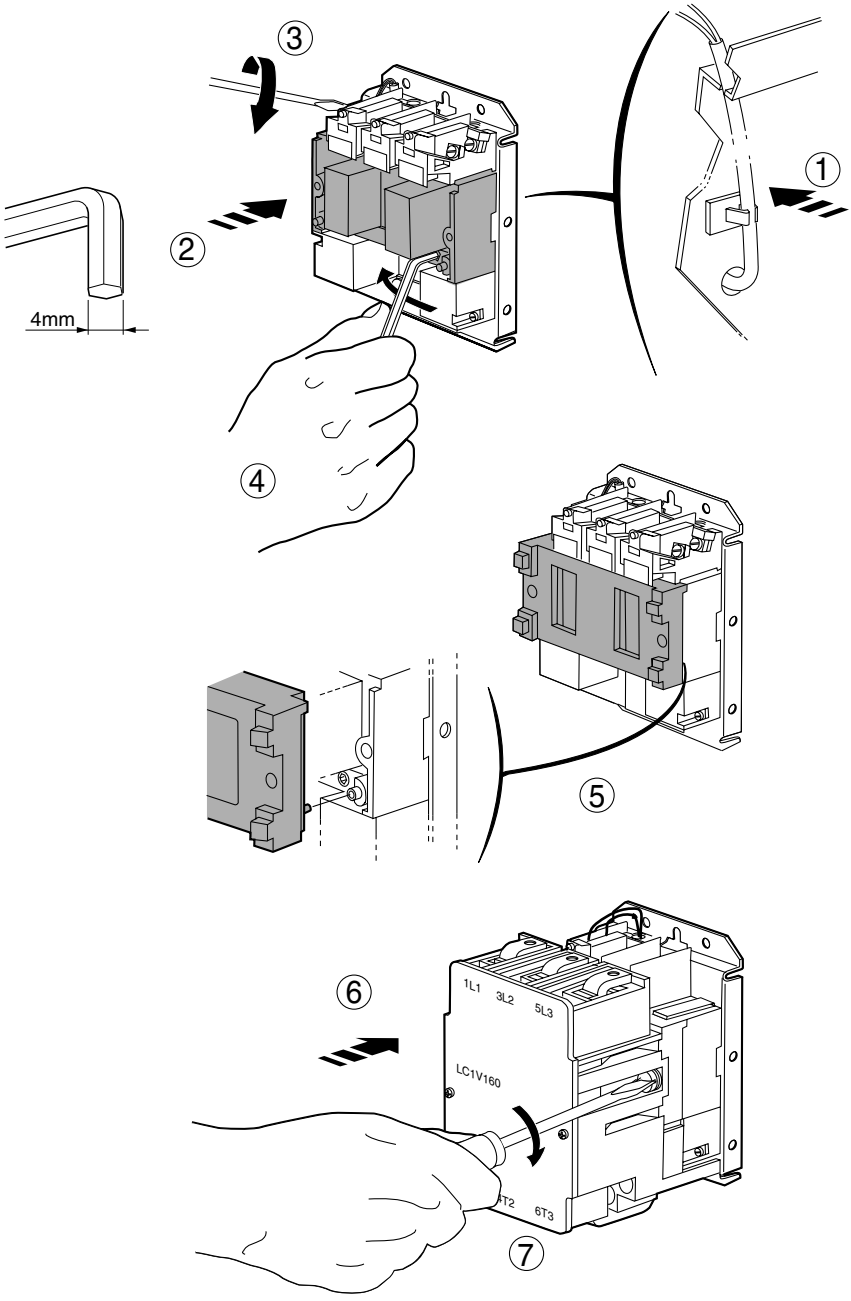

LC1-V320

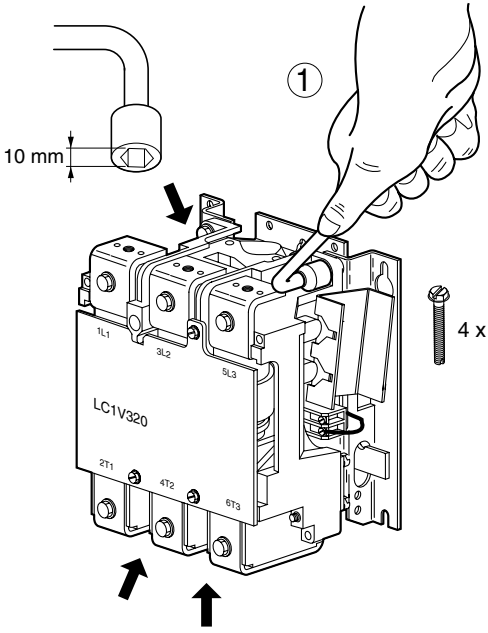
1
10 mm
4 x
1L1
3L2
5L3
LC1V320
2T1
4T2
6T3

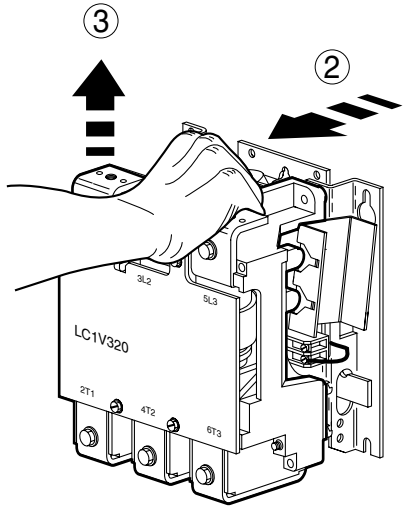
3
2
3L2
5L3
LC1V320
2T1
4T2
6T3

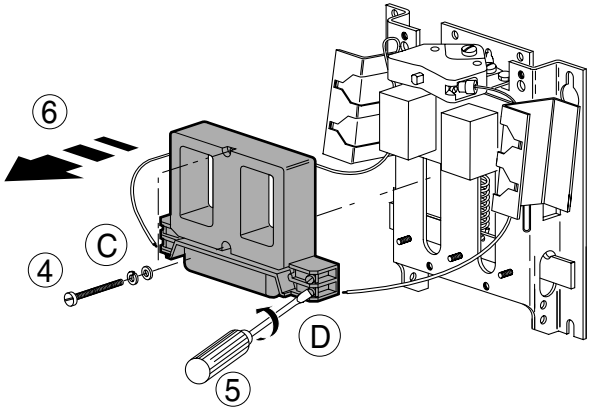
6
C
4
D
5

LC1-V320

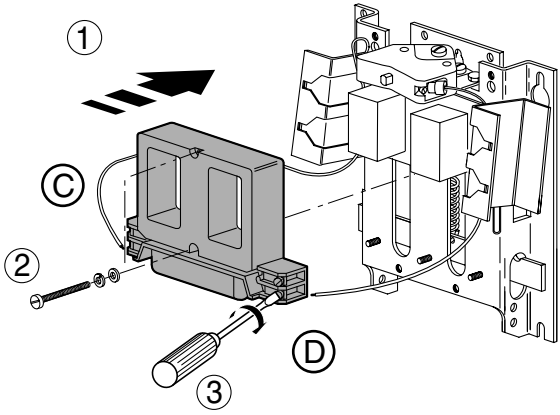

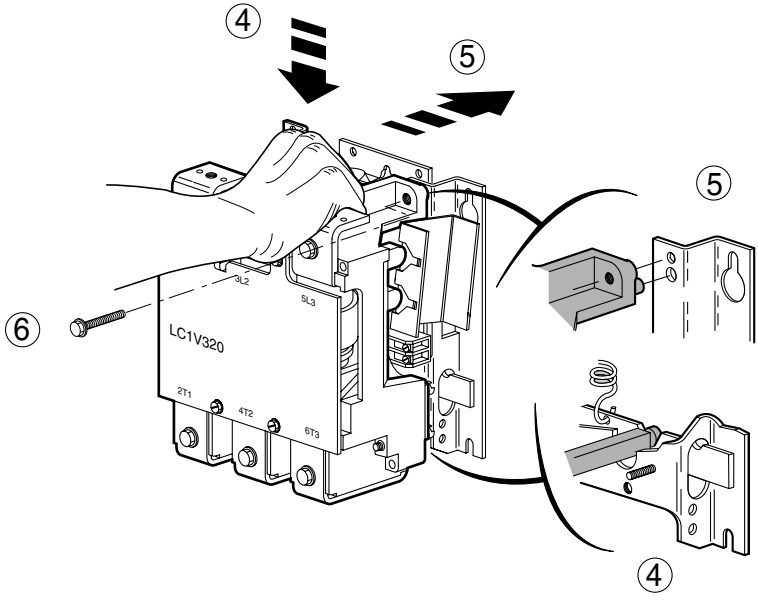

LC1-V610

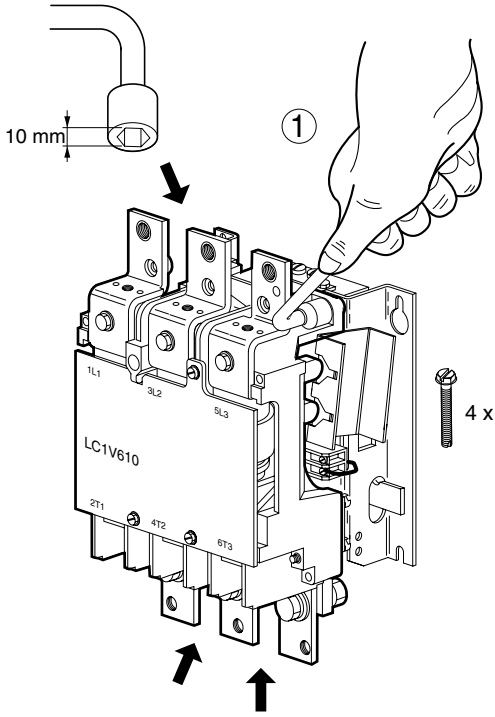
10 mm
1
4 x
1L1
3L2
5L3
LC1V610
2T1
4T2
6T3

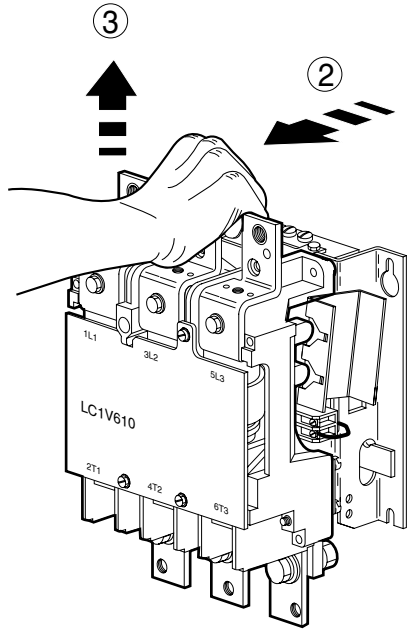
3
2
1L1
3L2
5L3
LC1V610
2T1
4T2
6T3

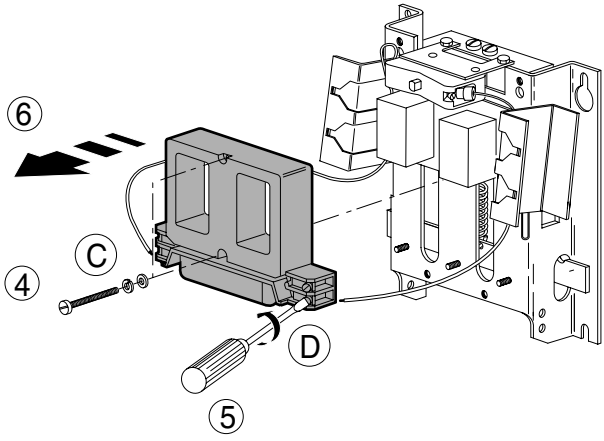
6
C
4
D
5

LC1-V610

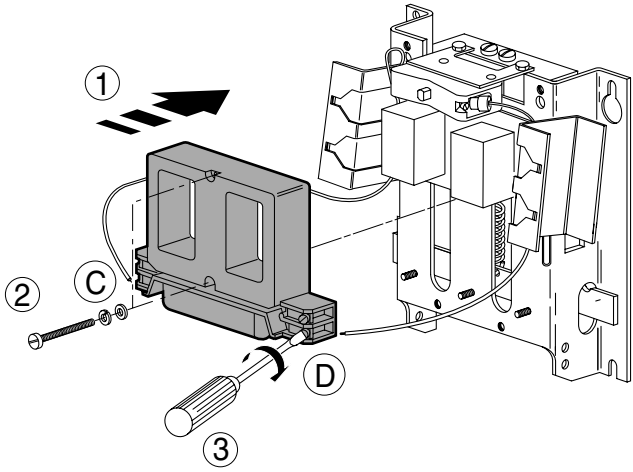

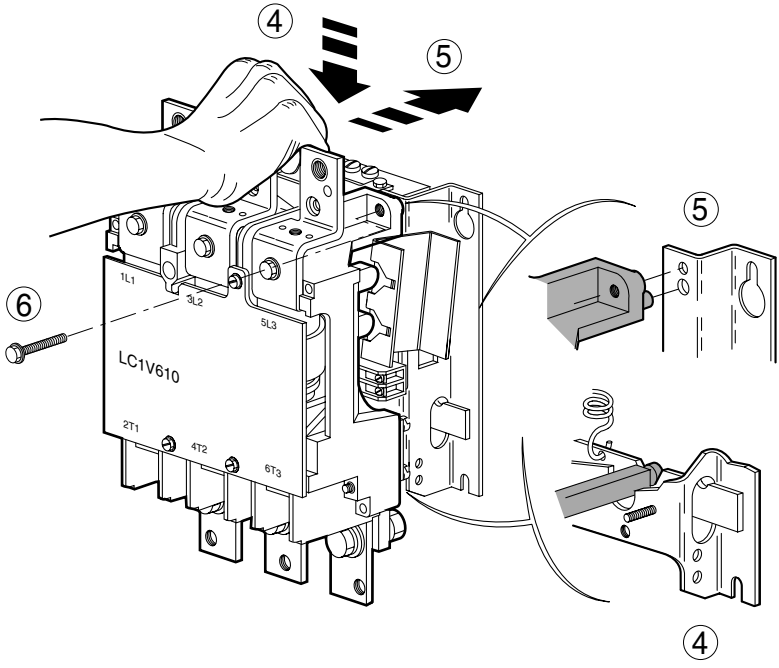

Contacts auxiliaires / Auxiliary contacts / Hilfskontakt / Conacto auxiliar

LC1-V160

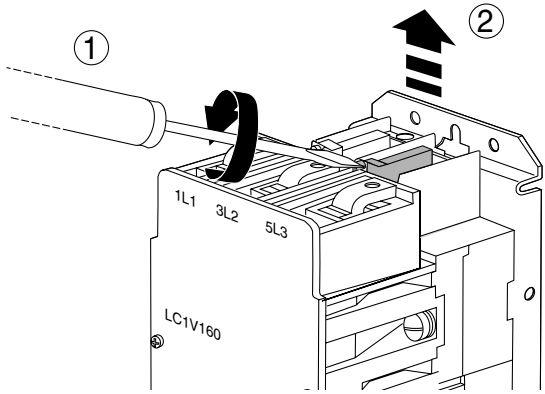

LC1-V320 / LC1-V610

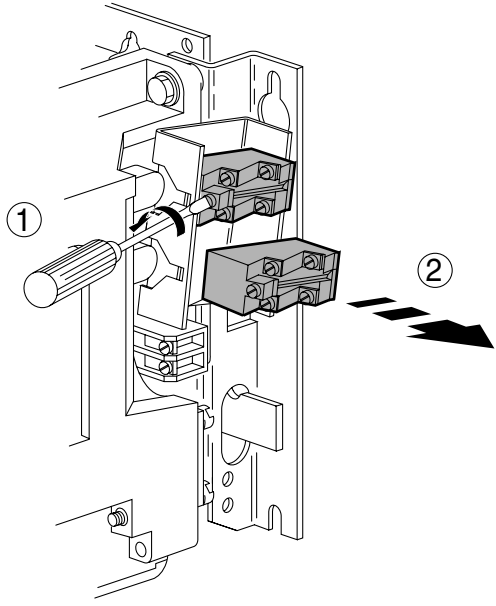

Câblage / Wiring / Verdrahtung / Cableodo

Contact auxiliaire / Auxiliairy contact / Hilfskontakt / Contacto auxiliar

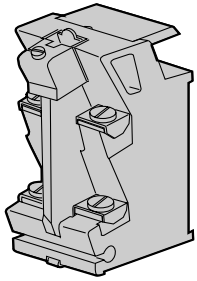

Bobine / Coil / Spule / Bobina

LC1-V1601

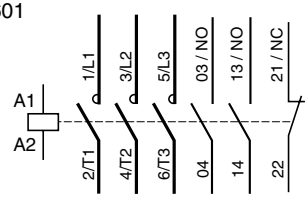

LC1-V320
LC1-V610

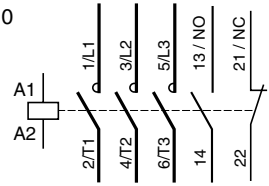

C = 1,2 Nm

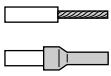

S = 2,5 mm²

S = 1,5 mm²

Câblage puissance / Power Wiring / Leistungsverdrahtung / Cableado de potencia

	mm²	mm	N.m	in lbs
LC1-V160	**70**	**4**	**14**	**120**
LC1-V320	**185**	**20**	**39**	**340**
LC1-V610	**2x185**	**20**	**39**	**340**

Encombrements / Overall dimension / Abmessungen / Condiciones de espacio

LC1-V320

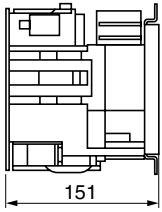

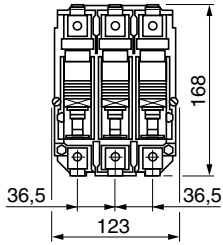

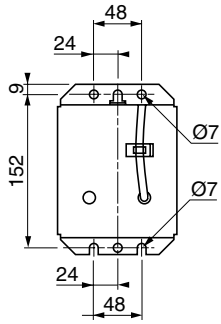

LC1-V320

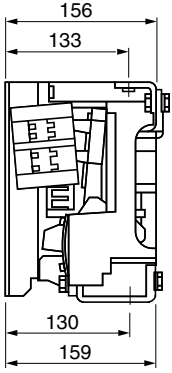

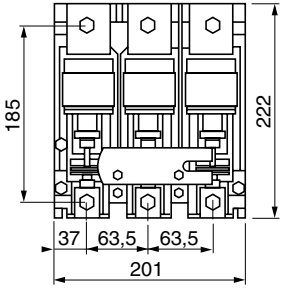

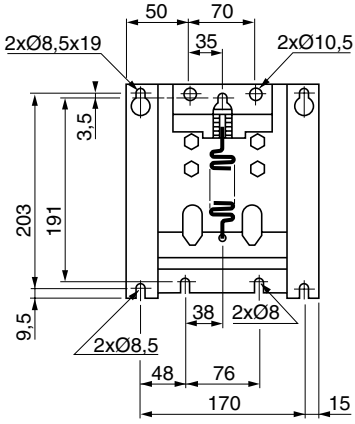

LC1-V610

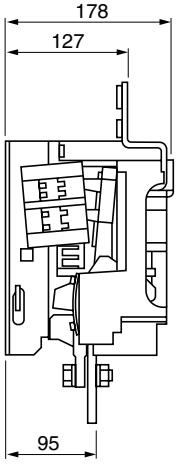

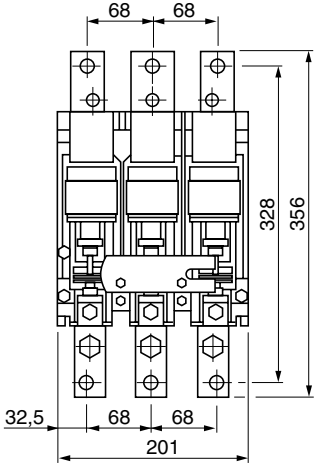

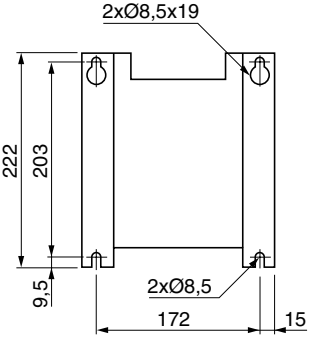

Contrôle d'usure des contacts / Contact wear allowance

LC1-V160

Test : avec bobine sous tension
Test : with coil energized

e ≤ 0,25 mm : remplacer le contacteur
replace the contactor

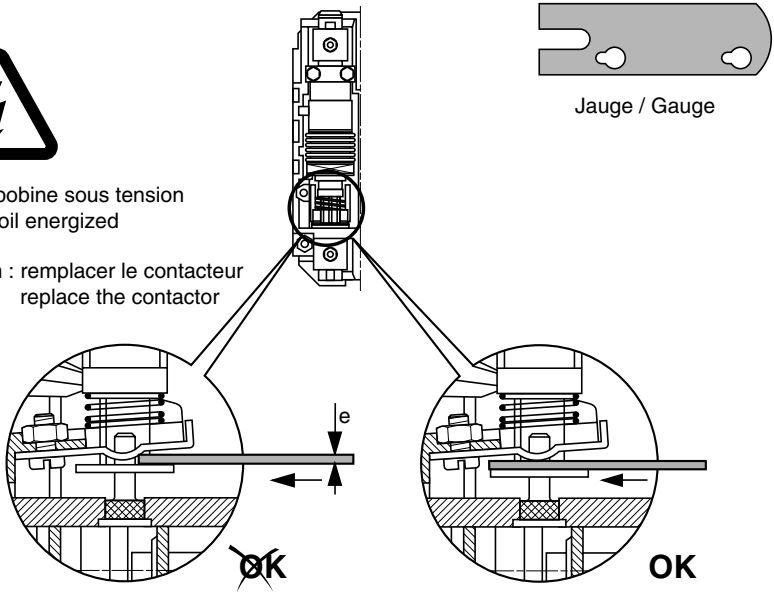

LC1-V320 / V610

Test : avec bobine sous tension
Test : with coil energized

e ≤ 0,5 mm : remplacer le contacteur
replace the contactor

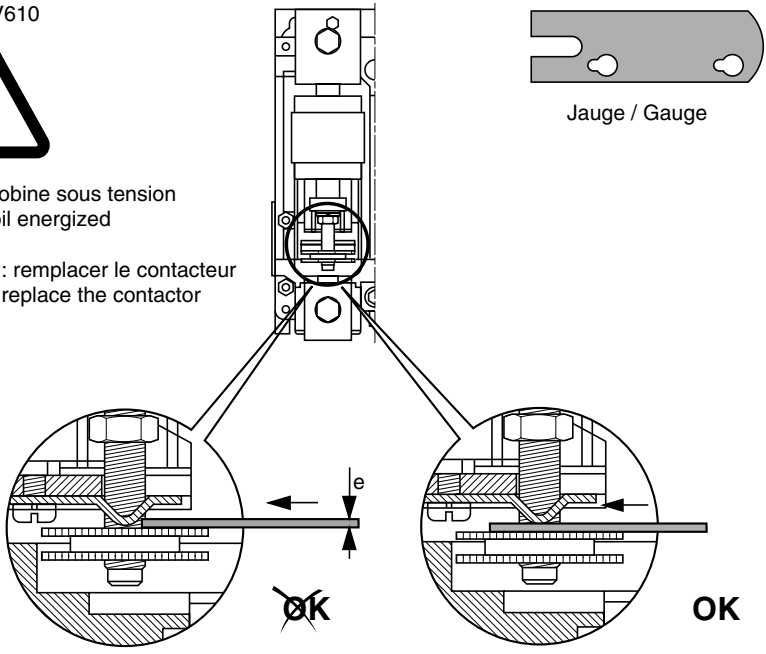

Inverseur / Reversing swicth / Umschalter / Inversor

LC1-V160

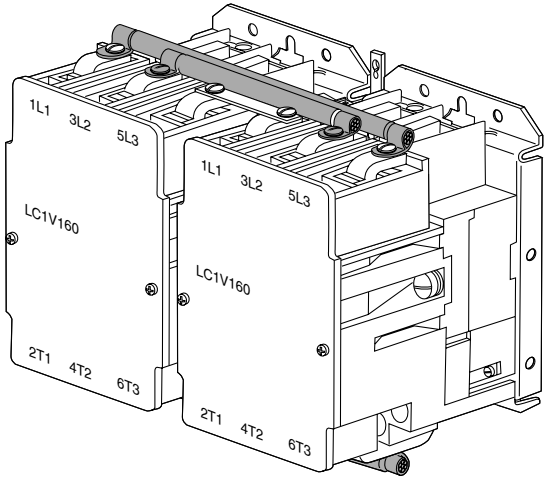

LC1-V320

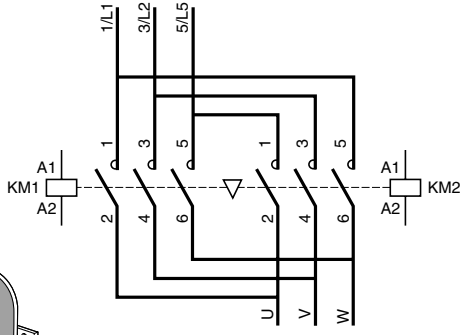

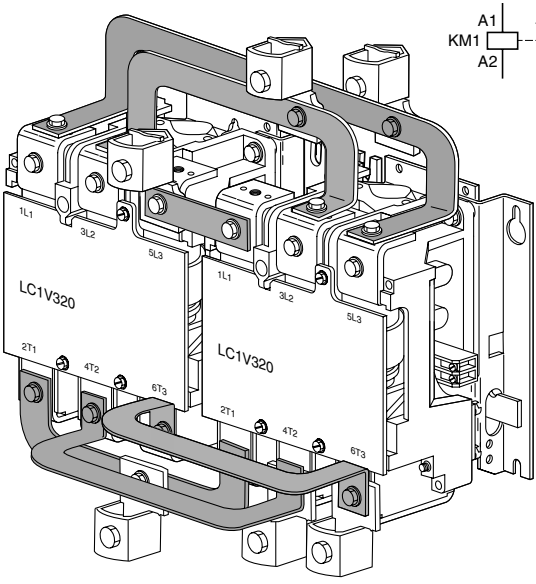

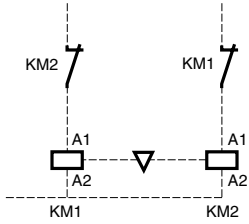

LC1-V610

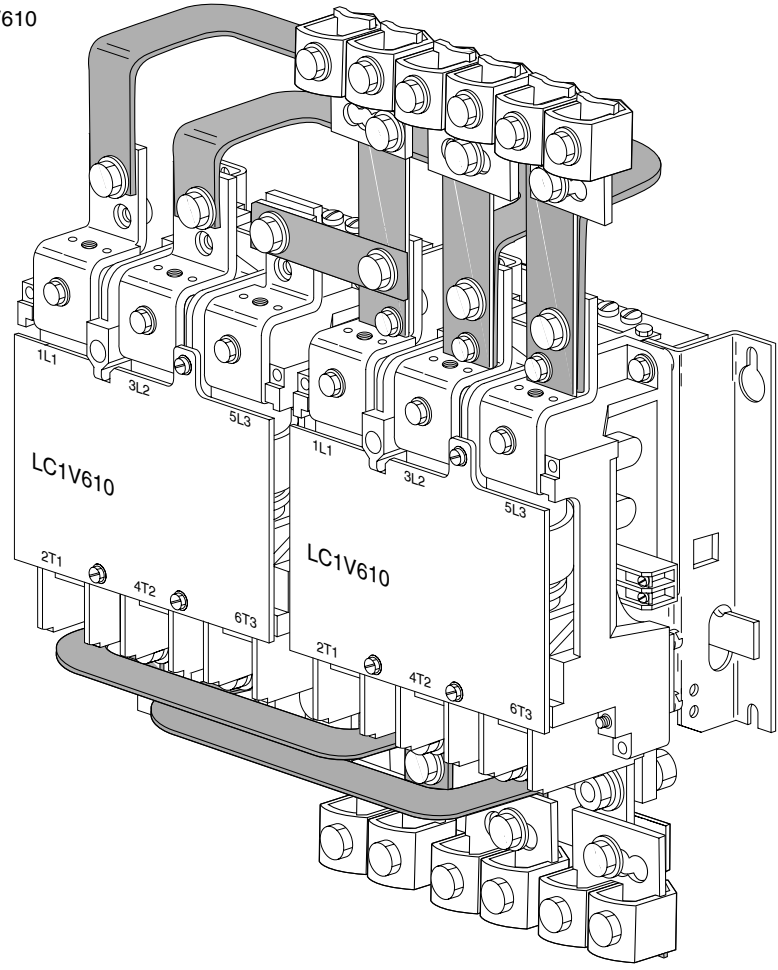
1L1
3L2
5L3
LC1V610
2T1
4T2
6T3
1L1
3L2
5L3
LC1V610
2T1
4T2
6T3

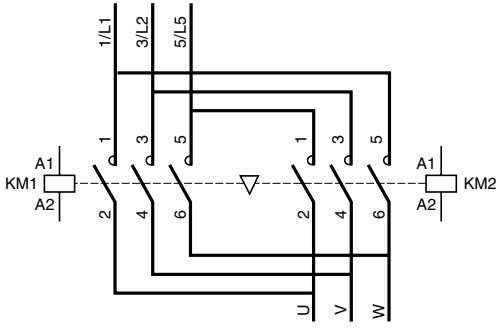
1/L1
3/L2
5/L5
1
3
5
1
3
5
A1
KM1
A2
A1
KM2
A2
2
4
6
2
4
6
U
V
W

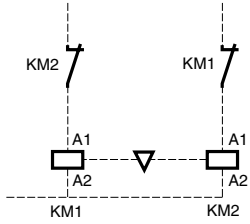
KM2
KM1
A1
A2
A1
A2
KM1
KM2

LC1-V160

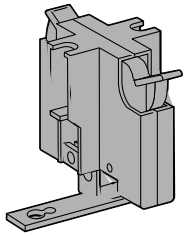

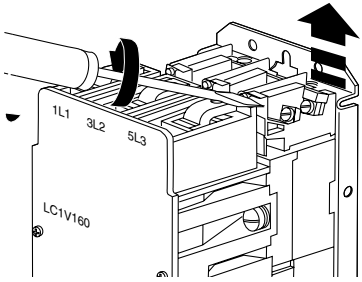

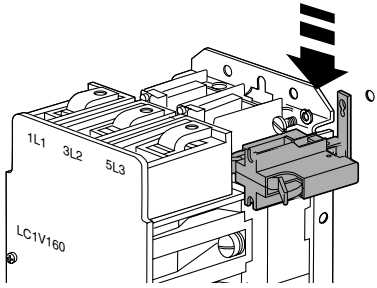

LC1-V320, LC1-V610

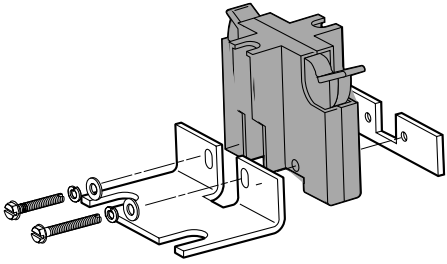

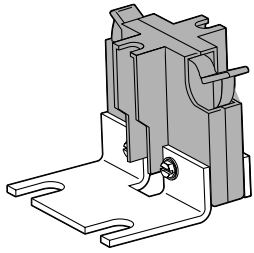

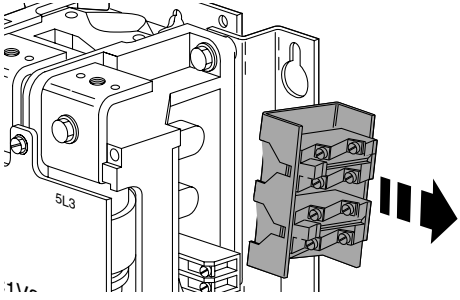

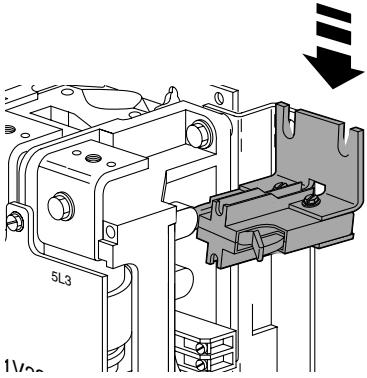

Kit

LC1-V610

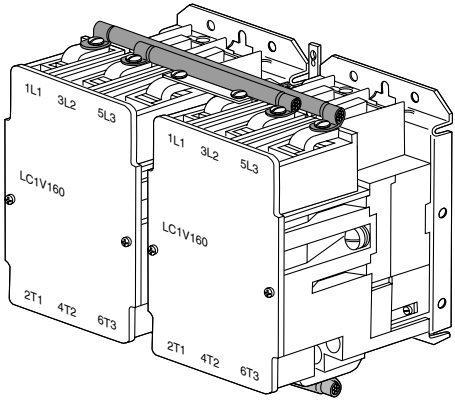

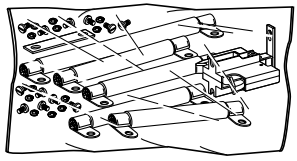

LC1-V320

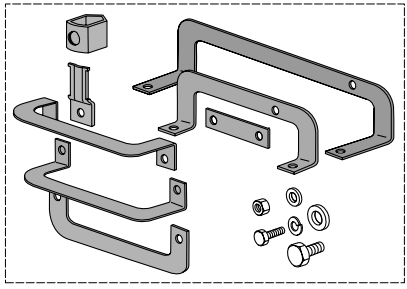

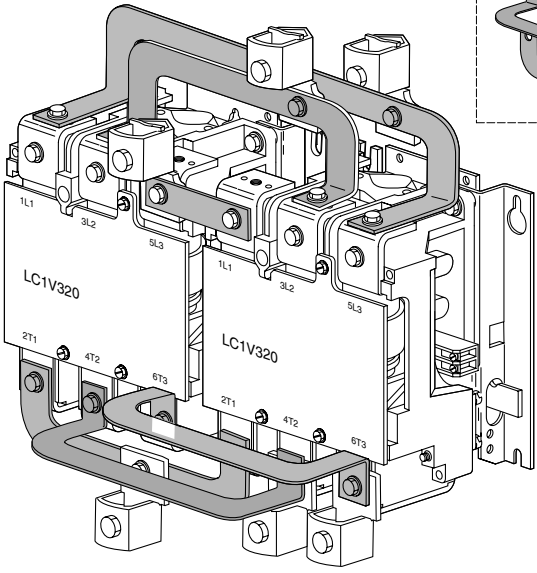

Kit

LC1-V610

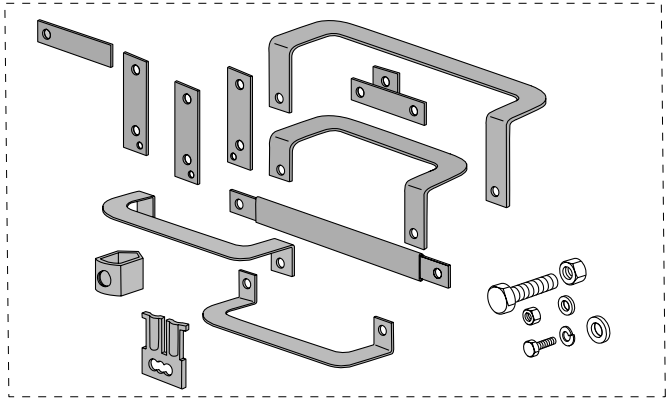

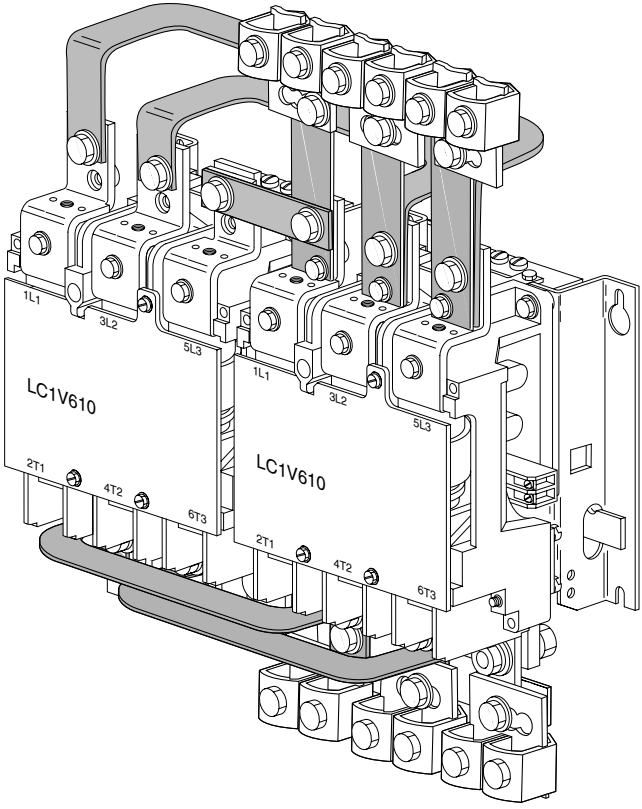
1L1
3L2
5L3
LC1V610
2T1
4T2
6T3
1L1
3L2
5L3
LC1V610
2T1
4T2
6T3

Perçage / Drilling / Bohrung / Taladro

LC1-V160

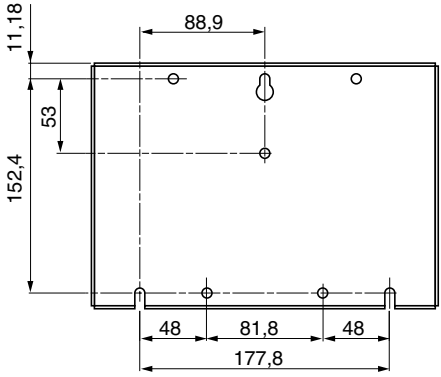

LC1-V320, LC1-V610

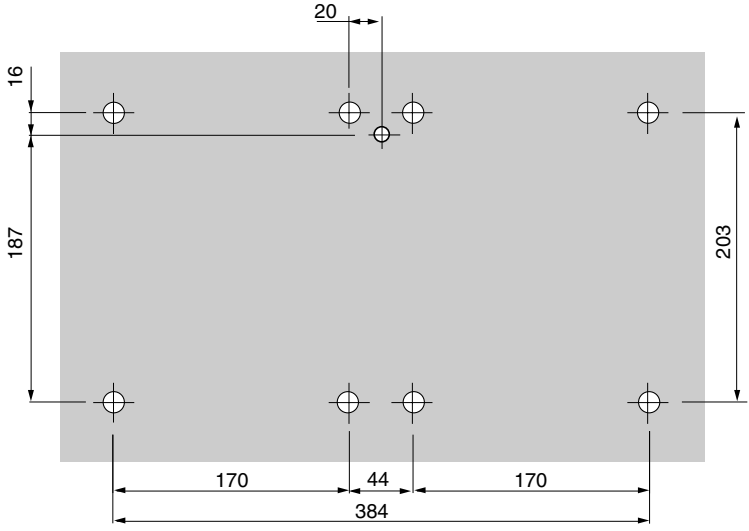

Encombrements / Overall dimension / Abmessungen / Condiciones de espacio

LC1-V160

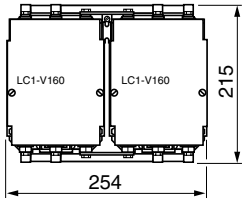

LC1-V320

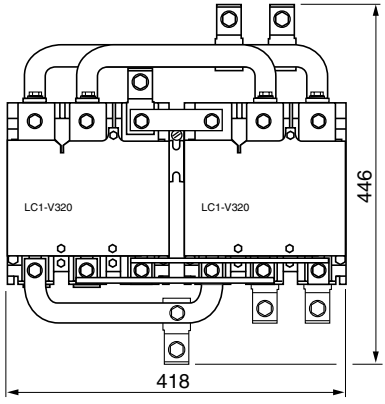
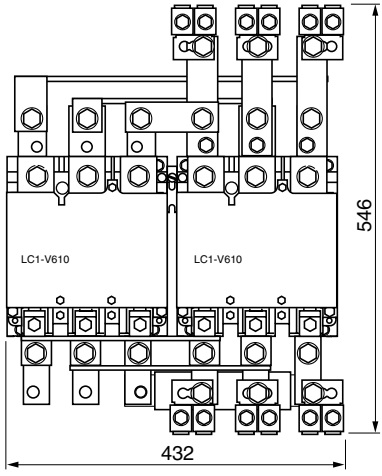
LC1-V610